R. C. Tronics Incorporated

Specializing In Electric Controls

2573 East Kercher Road
Goshen, Indiana 46528
Toll Free 1-866-457-7790

Phone 1-574-642-3857
Fax 1-574-642-3858
http://www.rctronics.com
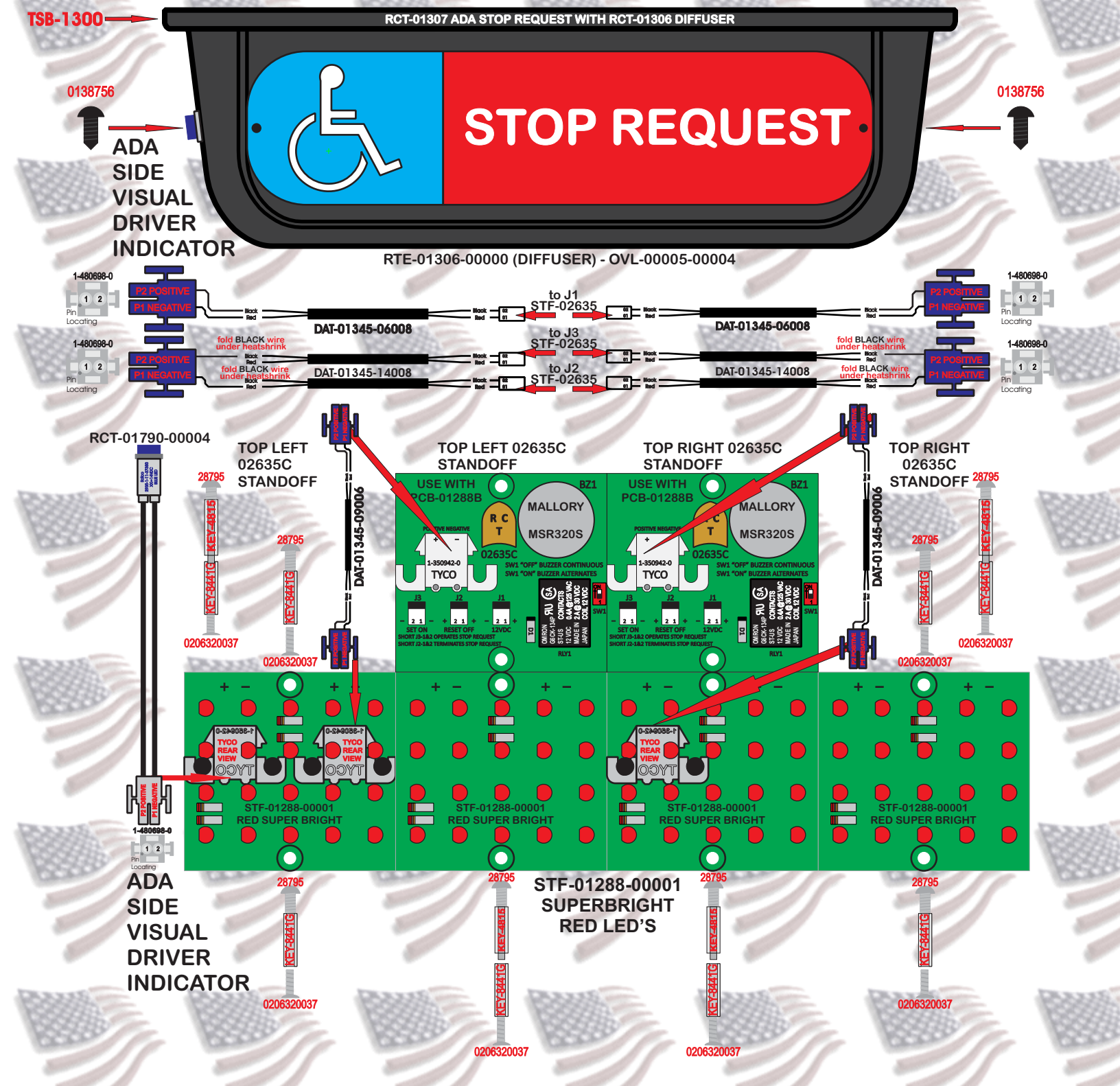
RCT-01307-00005
(DUPLICATE: RCT-01307-0002)
ADA & STOP REQUEST
SUPERBRIGHT RED LEDS
ADA DRIVER VISUAL INDICATOR