CN17
Alarm Inputs
to ground.
Operation dip
switch selectable;
Ignition, Master
Switch or Battery.
Alarm 1
Roof Hatch
Rear Door
Egress Window
Lift Door
Vandal Lock.

CN16
Engine Start only
with R/DOOR input.

CN15
Battery
1 thru 5 Output.
Cross Arm Output

CN14
Lift Flood Output
Rear Door Light Output
Ignition 6 thru 8
Output.

CN13
Ignition 2 Output
“OFF” w / SW09
DIP Switch 9, override.
Ignition 3 thru 5

CN12
Horn Input
and
Horn Output.

CN11
Clearance Output
Clearance Input
and
Ignition Input.

CN10
Ignition 1 Output
“OFF” w / SW09
DIP SW8, override.
Fan Low output.

CN18
Input to Amber Light.
Input to Red Indicator.
Input to Strobe Indicator.
Provides Negative output, SW01

CN19-CN20-CN21-CN22
Battery Negative
24 each total.

RCT-MOLEX- 00016
MATING HARNESS
CONNECTOR KIT

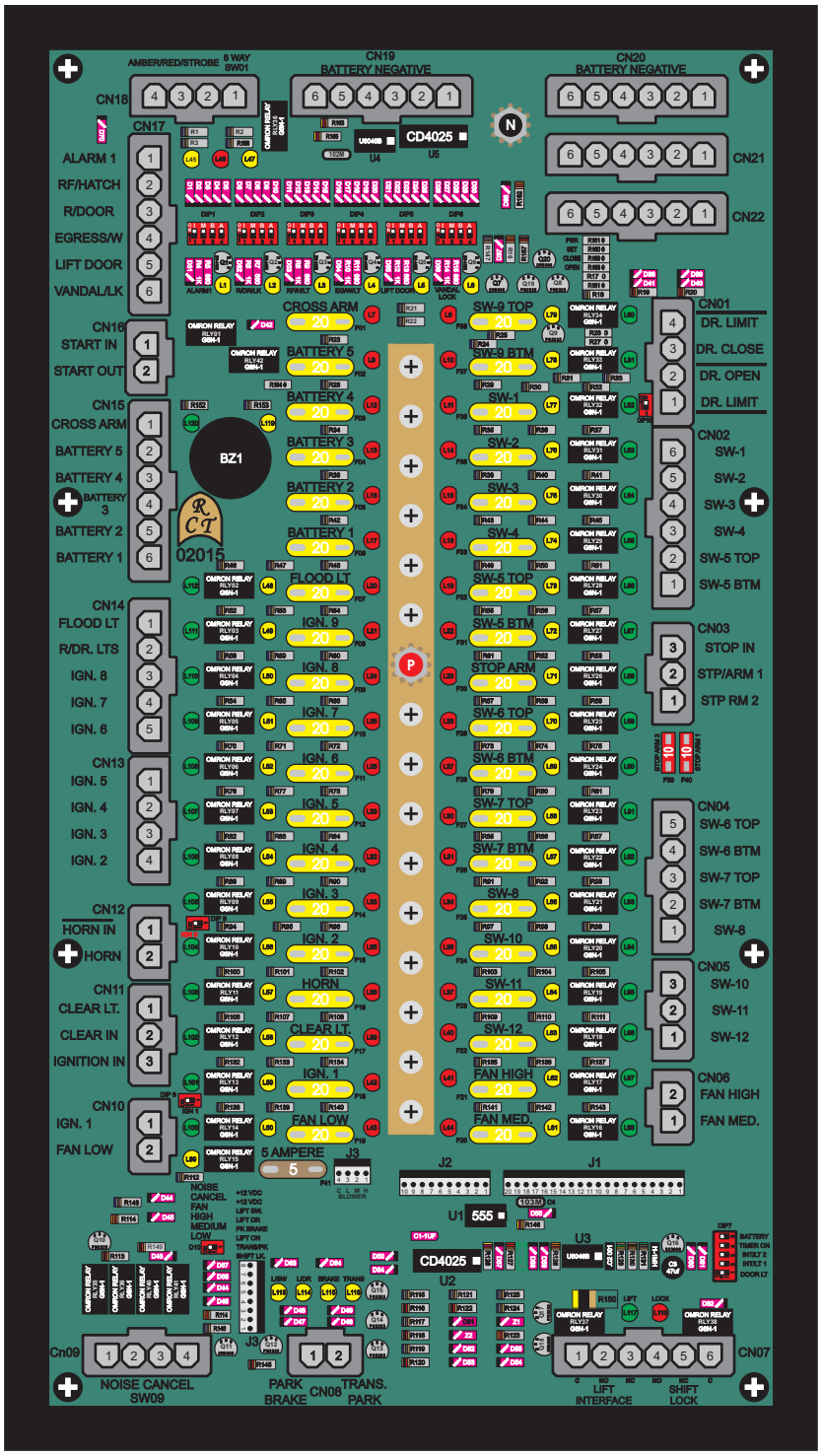

Cn01
Door Outputs
with Door Limits.

DIP SWITCH 10
Inhibits
“DOOR OPEN”
without vehicle
“IN PARK”.

CN02
Outputs from
switch panel.

Cn03
Input and
Outputs for Dual
Stop Arm.

CN04
Outputs from
switch panel.

CN05
Outputs from
switch panel.

CN06
Fan High Output.
Fan Medium Output.
Input J3, pin 1&2.

DIP7
Battery Enabled;
Interior Lights,
Switch 5
10 second Timer On,
Switch 4.
Interior 2 Light On
Switch 3.
Interior 1 Light On
Switch 2
Door Light On
Switch 1.

CN09
Opens 4 Negative
returns, SW09

DIP SWITCH 10
Removes Low-Medium-High
Fan with “Noise Cancel Switch

CN08
Park Brake Input
and
Transmission Input

CN07
Lift Interlock Output
and
Shift Lock Output.

CONTROLS SHOWN 50% OF ACTUAL SIZE: RCT-02015 9 x 16 INCHES