R. C. Tronics Incorporated

2573 East Kercher Road
Goshen, Indiana 46528
Toll Free 1-866-457-7790

Phone 1-574-642-3857
Fax 1-574-642-3858
http://www.rctronics.com

RCT-02144-0__07

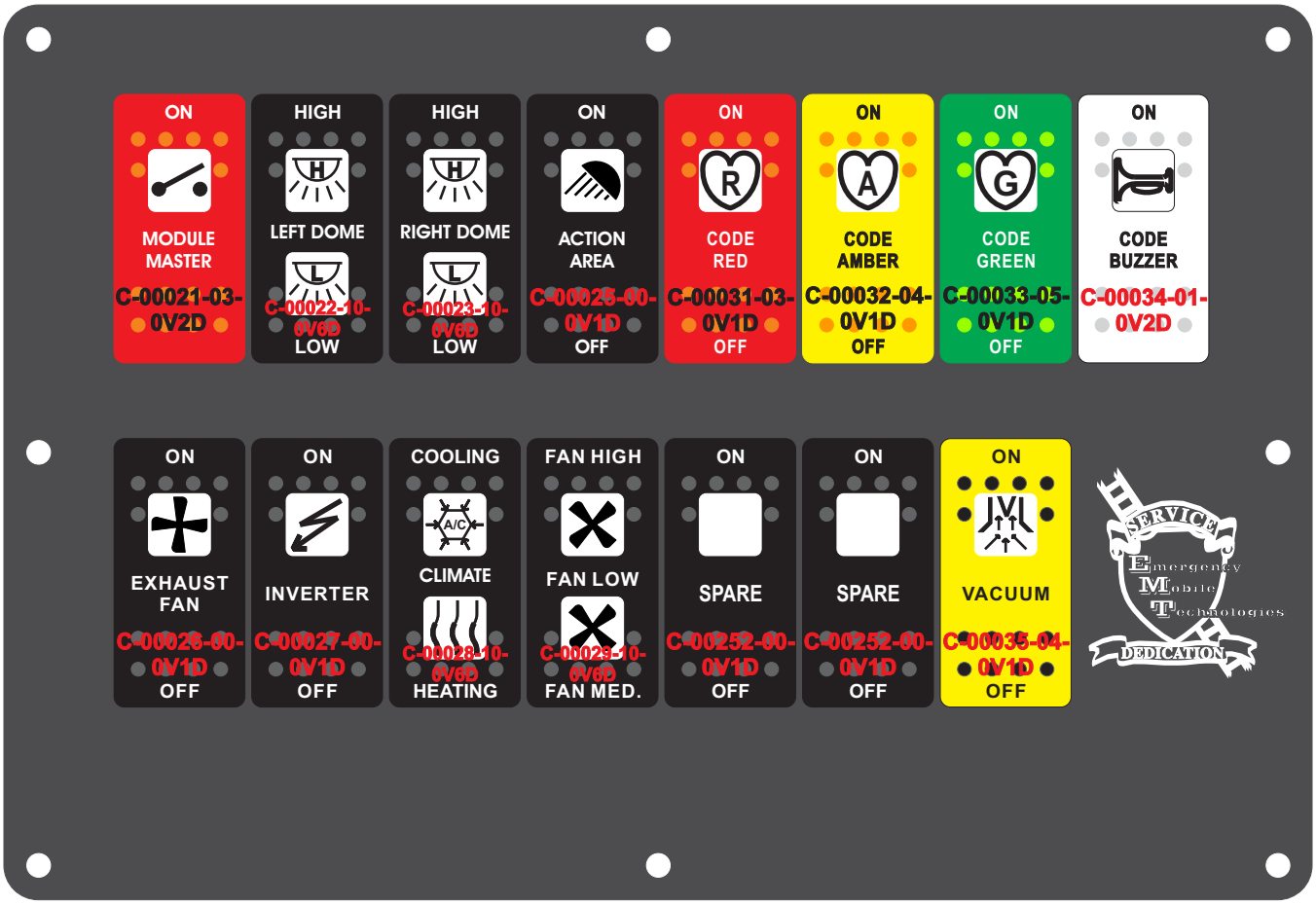
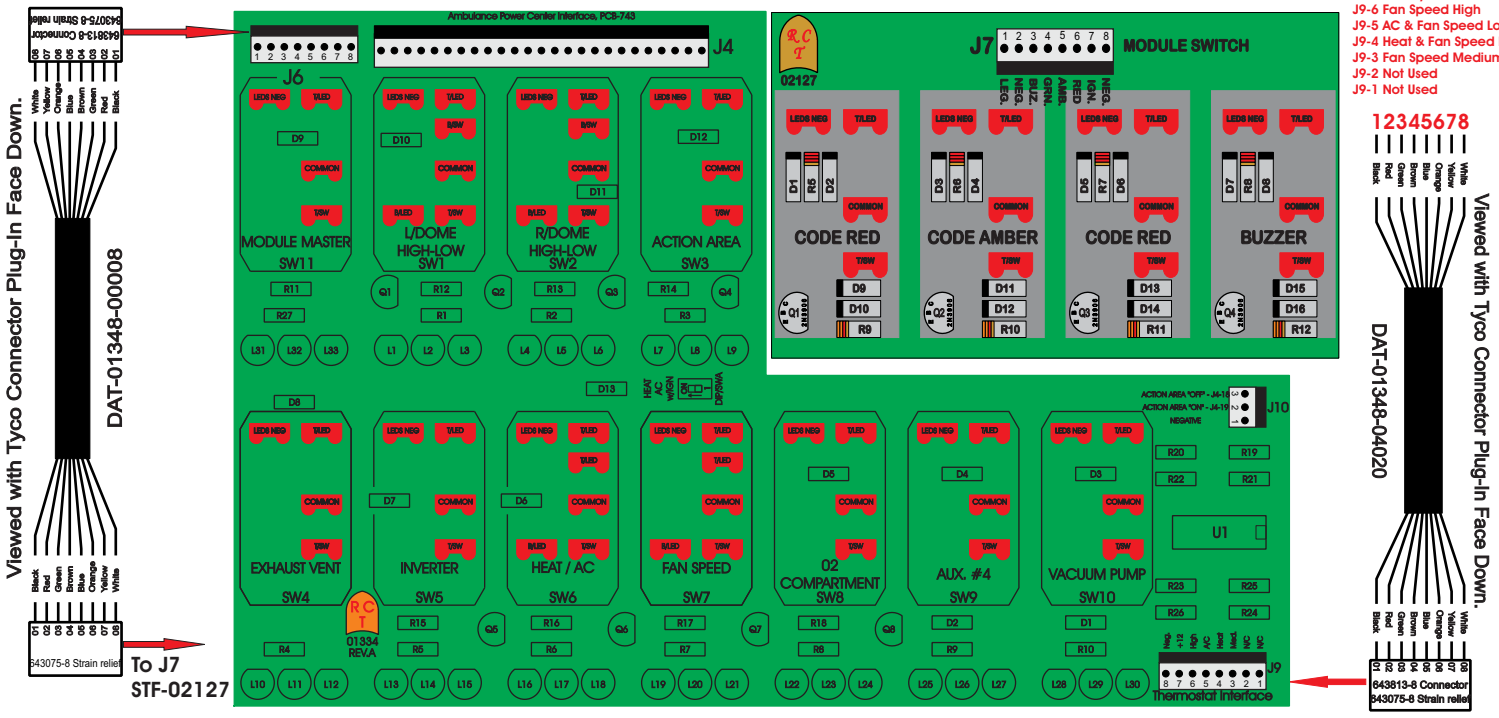
FAC-02144-00001
Size 9.5 x 6.5 inches