R. C. Tronics Incorporated

2573 East Kercher Road
Goshen, Indiana 46528
Toll Free 1-866-457-7790

Phone 1-574-642-3857
Fax 1-574-642-3858
http://www.rctronics.com

RCT-02873-0__00

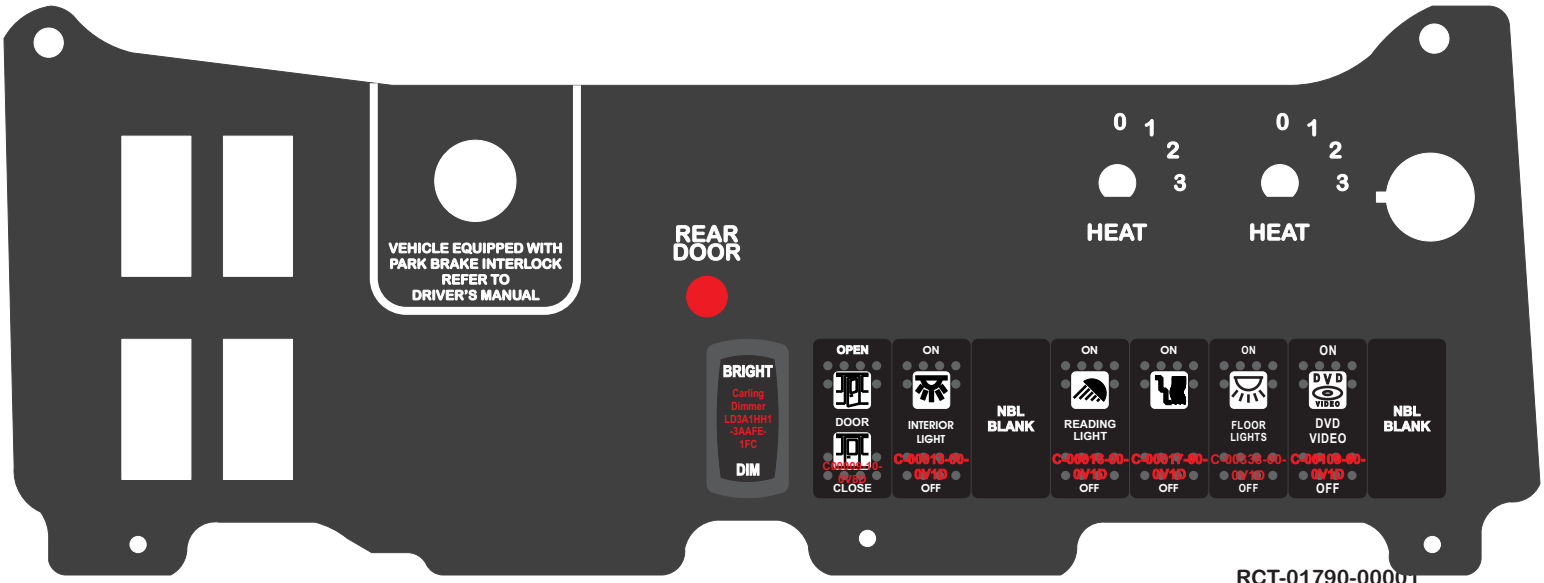

FAC-02873-00000
SIZE 18.9 X 7 INCHES

RCT-01790-00001

add TCLIP ½
to back of indicator

6 INCHES LONG

P2 POSITIVE
P1 NEGATIVE

1-480698-0
Pin Locating

Viewed with Tyco Connector
Plug-In Face Down.

Mate-N-Loc Connector, 2 Pin Part Number 1-480698-0

Tape Red Wire

03 Red
02 Green
01 Black

Red
Green
Black

OPEN
CLOSE

DAT-01346-03006

7A
6B
6A
5B
7B
5A

1-480700-0
Pin Insert End
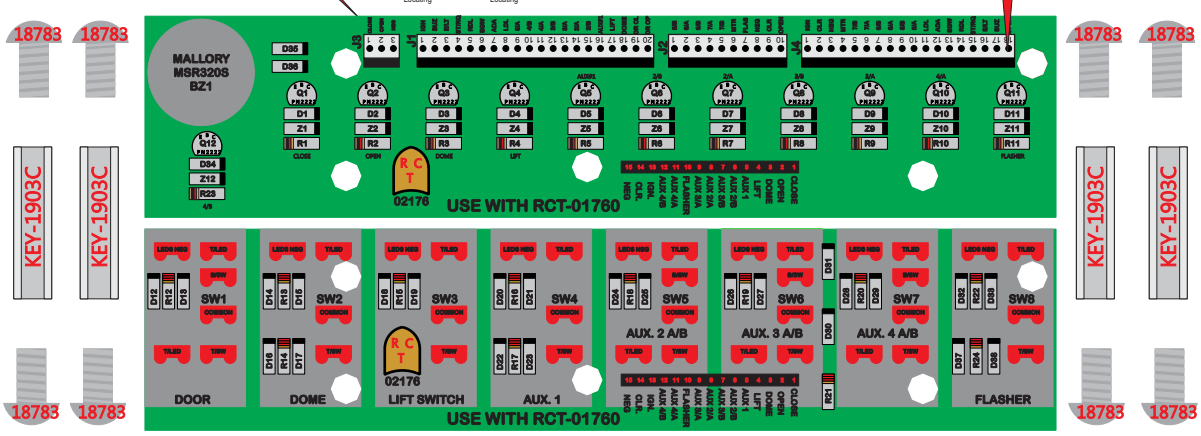
DAT-01354-02006